Linear Guideways

HG Series

2-1-12 Standard and Maximum Lengths of Rail

HIWIN offers standard rail lengths for customer needs. For non-standard E-values, the recommended dimension should not be greater than 1/2 of the pitch (P) dimension. This will prevent an unstable rail end.

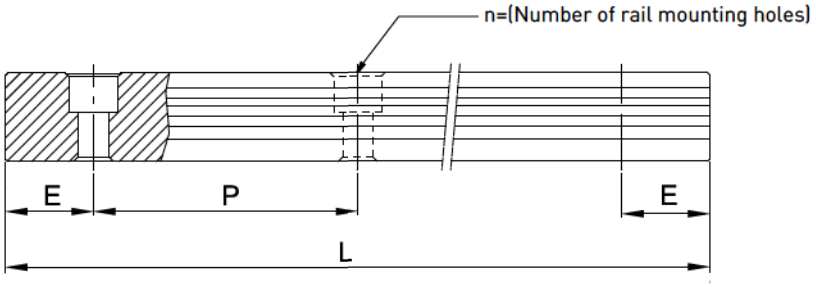

$$L = (n-1) \times P + 2 \times E \quad \text{Eq.2.1}$$

L : Total length of rail (mm)
n : Number of mounting holes
P : Distance between any two holes (mm)
E : Distance from the center of the last hole to the edge (mm)

Table 2-1-24 **Rail Standard Length and Max. Length**

unit: mm

Item	HG15	HG20	HG25	HG30	HG35	HG45	HG55	HG65
Standard Length L(n)	160 (3)	220 (4)	220 (4)	280 (4)	280 (4)	570 (6)	780 (7)	1,270 (9)
	220 (4)	280 (5)	280 (5)	440 (6)	440 (6)	885 (9)	1,020 (9)	1,570 (11)
	280 (5)	340 (6)	340 (6)	600 (8)	600 (8)	1,200 (12)	1,260 (11)	2,020 (14)
	340 (6)	460 (8)	460 (8)	760 (10)	760 (10)	1,620 (16)	1,500 (13)	2,620 (18)
	460 (8)	640 (11)	640 (11)	1,000 (13)	1,000 (13)	2,040 (20)	1,980 (17)	
	640 (11)	820 (14)	820 (14)	1,640 (21)	1,640 (21)	2,460 (24)	2,580 (22)	
	820 (14)	1,000 (17)	1,000 (17)	2,040 (26)	2,040 (26)	2,985 (29)	2,940 (25)	
		1,240 (21)	1,240 (21)	2,520 (32)	2,520 (32)			
			1,600 (27)	3,000 (38)	3,000 (38)			
Pitch (P)	60	60	60	80	80	105	120	150
Distance to End (E_s)	20	20	20	20	20	22.5	30	35
Max. Standard Length	1,960 (33)	4,000 (67)	4,000 (67)	3,960 (50)	3,960 (50)	3,930 (38)	3,900 (33)	3,970 (27)
Max. Length	2,000	4,000	4,000	4,000	4,000	4,000	4,000	4,000

Note : 1. Tolerance of E value for standard rail is 0.5~-0.5 mm. Tolerance of E value for jointed rail is 0~-0.3 mm.
2. Maximum standard length means the max. rail length with standard E value on both sides.
3. If different E value is needed, please contact HIWIN.

2-1-13 Dimensions for HIWIN HG Series

(1) HGH-CA / HGH-HA

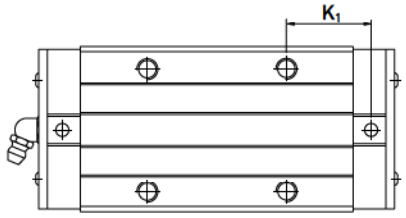

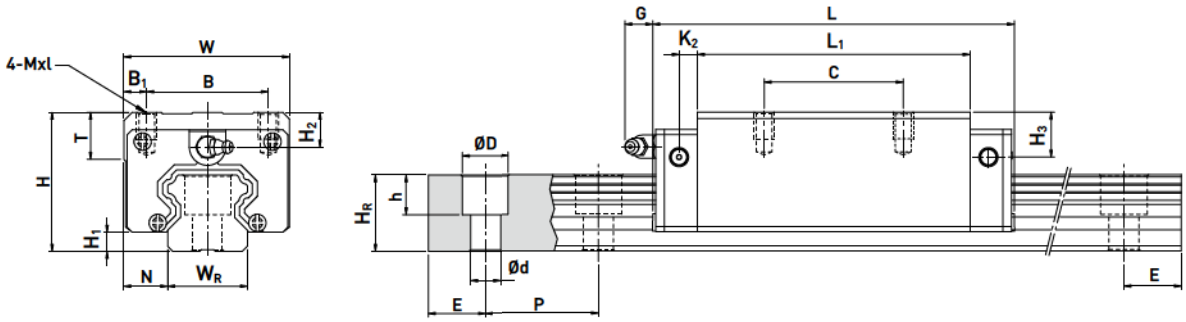

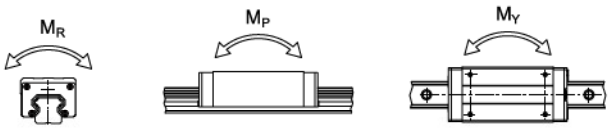

Model No.	Dimensions of Assembly (mm)			Dimensions of Block (mm)													Dimensions of Rail (mm)							Mounting Bolt for Rail	Basic Dynamic Load Rating	Basic Static Load Rating	Static Rated Moment			Weight	
	H	H_1	N	W	B	B_1	C	L_1	L	K_1	K_2	G	Mxl	T	H_2	H_3	W_R	H_R	D	h	d	P	E	(mm)	C(kN)	C_0 (kN)	M_R kN-m	M_P kN-m	M_Y kN-m	Block kg	Rail kg/m
HGH 15CA	28	4.3	9.5	34	26	4	26	39.4	61.4	10	4.85	5.3	M4x5	6	7.95	7.7	15	15	7.5	5.3	4.5	60	20	M4x16	11.38	16.97	0.12	0.10	0.10	0.18	1.45
HGH 20CA	30	4.6	12	44	32	6	36	50.5	77.5	12.25	6	12	M5x6	8	6	6	20	17.5	9.5	8.5	6	60	20	M5x16	17.75	27.76	0.27	0.20	0.20	0.30	2.21
HGH 20HA							50	65.2	92.2	12.6															21.18	35.90	0.35	0.35	0.35	0.39	
HGH 25CA	40	5.5	12.5	48	35	6.5	35	58	84	16.8	6	12	M6x8	8	10	9	23	22	11	9	7	60	20	M6x20	26.48	36.49	0.42	0.33	0.33	0.51	3.21
HGH 25HA							50	78.6	104.6	19.6															32.75	49.44	0.56	0.57	0.57	0.69	
HGH 30CA	45	6	16	60	40	10	40	70	97.4	20.25	6	12	M8x10	8.5	9.5	13.8	28	26	14	12	9	80	20	M8x25	38.74	52.19	0.66	0.53	0.53	0.88	4.47
HGH 30HA							60	93	120.4	21.75															47.27	69.16	0.88	0.92	0.92	1.16	
HGH 35CA	55	7.5	18	70	50	10	50	80	112.4	20.6	7	12	M8x12	10.2	16	19.6	34	29	14	12	9	80	20	M8x25	49.52	69.16	1.16	0.81	0.81	1.45	6.30
HGH 35HA							72	105.8	138.2	22.5															60.21	91.63	1.54	1.40	1.40	1.92	
HGH 45CA	70	9.5	20.5	86	60	13	60	97	139.4	23	10	12.9	M10x17	16	18.5	30.5	45	38	20	17	14	105	22.5	M12x35	77.57	102.71	1.98	1.55	1.55	2.73	10.41
HGH 45HA							80	128.8	171.2	28.9															94.54	136.46	2.63	2.68	2.68	3.61	
HGH 55CA	80	13	23.5	100	75	12.5	75	117.7	166.7	27.35	11	12.9	M12x18	17.5	22	29	53	44	23	20	16	120	30	M14x45	114.44	148.33	3.69	2.64	2.64	4.17	15.08
HGH 55HA							95	155.8	204.8	36.4															139.35	196.20	4.88	4.57	4.57	5.49	
HGH 65CA	90	15	31.5	126	76	25	70	144.2	200.2	43.1	14	12.9	M16x20	25	15	15	63	53	26	22	18	150	35	M16x50	163.63	215.33	6.65	4.27	4.27	7.00	21.18
HGH 65HA							120	203.6	259.6	47.8															208.36	303.13	9.38	7.38	7.38	9.82	

Note : 1 kgf = 9.81 N

Linear Guideways

HG Series

(2) HGL-CA / HGL-HA

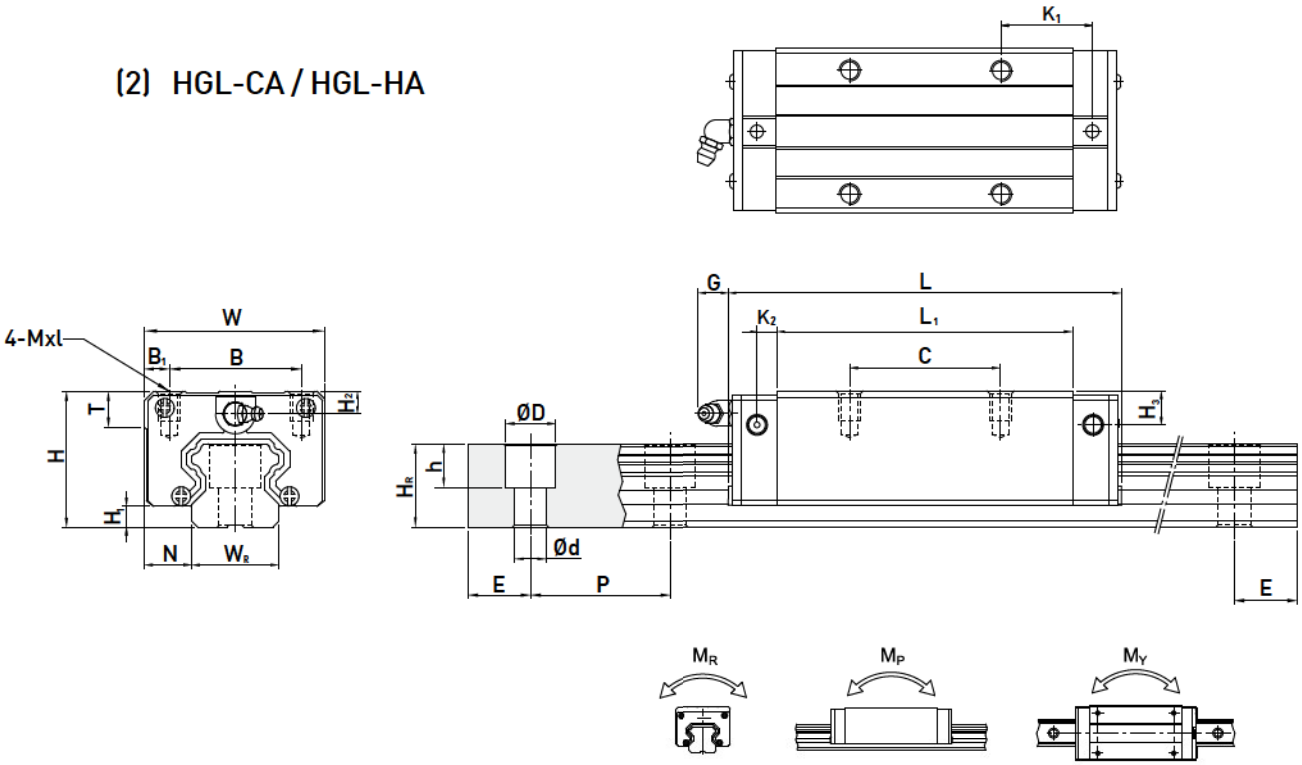

Model No.	Dimensions of Assembly (mm)			Dimensions of Block (mm)													Dimensions of Rail (mm)							Mounting Bolt for Rail	Basic Dynamic Load Rating	Basic Static Load Rating	Static Rated Moment			Weight	
	H	H_1	N	W	B	B_1	C	L_1	L	K_1	K_2	G	Mxl	T	H_2	H_3	W_R	H_R	D	h	d	P	E	(mm)	C(kN)	C_0 (kN)	M_R kN-m	M_P kN-m	M_Y kN-m	Block kg	Rail kg/m
HGL 15CA	24	4.3	9.5	34	26	4	26	39.4	61.4	10	4.85	5.3	M4x4	6	3.95	3.7	15	15	7.5	5.3	4.5	60	20	M4x16	11.38	16.97	0.12	0.10	0.10	0.14	1.45
HGL 25CA	36	5.5	12.5	48	35	6.5	35	58	84	15.7	6	12	M6x6	8	6	5	23	22	11	9	7	60	20	M6x20	26.48	36.49	0.42	0.33	0.33	0.42	3.21
HGL 25HA							50	78.6	104.6	18.5															32.75	49.44	0.56	0.57	0.57	0.57	
HGL 30CA	42	6	16	60	40	10	40	70	97.4	20.25	6	12	M8x10	8.5	6.5	10.8	28	26	14	12	9	80	20	M8x25	38.74	52.19	0.66	0.53	0.53	0.78	4.47
HGL 30HA							60	93	120.4	21.75															47.27	69.16	0.88	0.92	0.92	1.03	
HGL 35CA	48	7.5	18	70	50	10	50	80	112.4	20.6	7	12	M8x12	10.2	9	12.6	34	29	14	12	9	80	20	M8x25	49.52	69.16	1.16	0.81	0.81	1.14	6.30
HGL 35HA							72	105.8	138.2	22.5															60.21	91.63	1.54	1.40	1.40	1.52	
HGL 45CA	60	9.5	20.5	86	60	13	60	97	139.4	23	10	12.9	M10x17	16	8.5	20.5	45	38	20	17	14	105	22.5	M12x35	77.57	102.71	1.98	1.55	1.55	2.08	10.41
HGL 45HA							80	128.8	171.2	28.9															94.54	136.46	2.63	2.68	2.68	2.75	
HGL 55CA	70	13	23.5	100	75	12.5	75	117.7	166.7	27.35	11	12.9	M12x18	17.5	12	19	53	44	23	20	16	120	30	M14x45	114.44	148.33	3.69	2.64	2.64	3.25	15.08
HGL 55HA							95	155.8	204.8	36.4															139.35	196.20	4.88	4.57	4.57	4.27	

Note : 1 kgf = 9.81 N